DS-2CD3D204LK2E-IRLA

2 MP Smart Hybrid Light Motion 2.0 Fixed Bullet Network Camera

Hikvision has been dedicated to develop products with security since established.
Hikvision always follows security by design principle and has adopted many methods of security technologies into our product development lifecycle, including terminal security, data security, application security, network security, and privacy protection.
In the meantime, the security technologies used by Hikvision are all in compliance with local applicable laws and safety regulations. These security measures could enhance product's cyber security protection capability and protect your devices as well as your data from malicious cyber attacks.

- High quality imaging with 2 MP resolution
- Efficient H.265+ compression technology to save bandwidth and storage
- Smart Hybrid Light: advanced technology with long range
- Clear imaging against strong back light due to 120dB WDR technology
- 3D DNR technology delivers clean and sharp images
- Built-in microphone for real-time audio security
- Water and dust resistant (IP67)

▪ Specification

Camera	
Image Sensor	1/2.7" Progressive Scan CMOS
Max. Resolution	1920 × 1080
Shutter Time	1/3 s to 1/100,000 s
Min. Illumination	Color: 0.003 Lux @ (F1.4, AGC ON),B/W: 0 Lux with IR
Day & Night	IR cut filter
Angle Adjustment	Pan: 0° to 360°,tilt: 0° to 90°,rotate: 0° to 360°
Lens	
Lens Type	Fixed focal lens, 2.8, 4, and 6 mm optional
Focal Length & FOV	2.8 mm, horizontal FOV 111°, vertical FOV 59°, diagonal FOV 133° 4 mm, horizontal FOV 91°, vertical FOV 46°, diagonal FOV 109° 6 mm, horizontal FOV 56°, vertical FOV 29°, diagonal FOV 65°
Lens Mount	M12
Iris Type	Fixed
Aperture	F1.4
DORI	
DORI	2.8 mm, D: 43 m, O: 17 m, R: 9 m, I: 5 m 4 mm, D: 53 m, O: 21 m, R: 11 m, I: 6 m 6 mm, D: 86 m, O: 34 m, R: 17 m, I: 9 m
Illuminator	
Supplement Light Type	IR,White Light
Supplement Light Range	Up to 50 m
Smart Supplement Light	Yes
IR Wavelength	850 nm
Video	
Main Stream	50 Hz: 25 fps (1920 × 1080, 1280 × 720) 60 Hz: 30 fps (1920 × 1080, 1280 × 720)
Sub-Stream	50 Hz: 25 fps (640 × 480, 640 × 360) 60 Hz: 30 fps (640 × 480, 640 × 360)
Third Stream	50 Hz: 1 fps (640 × 360) 60 Hz: 1 fps (640 × 360)
Video Compression	Main stream: H.265+/H.265/H.264+/H.264, Sub-stream: H.265/H.264/MJPEG, Third stream: H.265/H.264
Video Bit Rate	32 Kbps to 8 Mbps
H.264 Type	Baseline Profile,Main Profile,High Profile
H.265 Type	Main Profile
Bit Rate Control	CBR,VBR
Region of Interest (ROI)	1 fixed region for main stream and sub-stream
Audio	
Audio Type	Mono sound
Environment Noise Filtering	Yes
Audio Sampling Rate	8 kHz/16 kHz
Audio Compression	G.711ulaw/G.711alaw/G.722.1/G.726/MP2L2/PCM/AAC-LC

Audio Bit Rate	64 Kbps (G.711ulaw)/64 Kbps (G.711alaw)/16 Kbps (G.722.1)/16 Kbps (G.726)/32 to 160 Kbps (MP2L2)/16 to 64 Kbps (AAC-LC)
Network	
Security	Password protection, complicated password, HTTPS encryption, 802.1X authentication (EAP-MD5), watermark, basic and digest authentication for HTTP/HTTPS, WSSE and digest authentication for Open Network Video Interface, RTP/RTSP over HTTPS, security audit log, TLS 1.2, TLS 1.3, host authentication (MAC address)
Simultaneous Live View	Up to 6 channels
API	Open Network Video Interface (Profile S, Profile T, Profile G),ISAPI,SDK
Protocols	TCP/IP, ICMP, DHCP, DNS, HTTP, RTP, RTSP, NTP, IGMP, IPv4, IPv6, UDP, QoS, FTP, SMTP, HTTPS, DDNS, UPnP, 802.1X
User/Host	Up to 32 users 3 user levels: administrator, operator, and user
Client	iVMS-4200,Hik-Connect
Web Browser	Plug-in required live view: IE 10, IE 11, Local service: Chrome 57.0+, Firefox 52.0+
Image	
Wide Dynamic Range (WDR)	120 dB
SNR	≥ 52 dB
Day/Night Switch	Day,Night,Auto,Schedule
Image Enhancement	BLC,HLC,3D DNR
Image Settings	Rotate mode,saturation,brightness,contrast,sharpness,gain,white balance,adjustable by client software or web browser
Privacy Mask	4 programmable polygon privacy masks
Interface	
Ethernet Interface	1 RJ45 10 M/100 M self-adaptive Ethernet port
On-Board Storage	Not support
Built-in Microphone	Yes
Reset Key	Yes
Event	
Basic Event	Motion detection (support alarm triggering by specified target types (human and vehicle)),video tampering alarm,exception
Smart Event	Line crossing detection, intrusion detection
Linkage	Upload to FTP, send email, notify surveillance center, trigger recording, trigger capture
General	
Power	12 VDC ± 25%, 0.4 A, max. 5 W,Ø5.5 mm coaxial power plug,reverse polarity protection, PoE: IEEE 802.3af, Class 3, max. 6.5 W
Material	Front cover: Metal, body: Plastic, bracket: Plastic
Dimension	170.8 mm × 66 mm × 69.1 mm (6.7" × 2.6" × 2.7")
Package Dimension	216 mm × 121 mm × 118 mm (8.5" × 4.8" × 4.6")
Weight	Approx. 270 g (0.6 lb.)
With Package Weight	Approx. 481 g (1.1 lb.)

Storage Conditions	-30 °C to 60 °C (-22 °F to 140 °F). Humidity 95% or less (non-condensing)
Startup and Operating Conditions	-30 °C to 60 °C (-22 °F to 140 °F). Humidity 95% or less (non-condensing)
Language	English, Turkish, Polish, Romanian, Czech, Slovak, Traditional Chinese, Thai, Vietnamese, Croatian, Slovenian, Serbian, Ukrainian
General Function	Heartbeat,anti-banding,mirror,password reset via email,pixel counter,password protection
Approval	
EMC	FCC: 47 CFR Part 15, Subpart B, IC: ICES-003: Issue 7
Safety	UL: UL 62368-1, CB: IEC 62368-1:2014+A11, CE-LVD: EN 62368-1:2014/A11:2017, BIS: IS 13252 (Part 1): 2010/IEC 60950-1:2005
Environment	CE-RoHS: 2011/65/EU
Protection	IP67: IEC 60529-2013

▪ Typical Application

Hikvision products are classified into three levels according to their anti-corrosion performance. Refer to the following description to choose for your using environment.

This model has NO SPECIFIC PROTECTION.

Level	Description
Top-level protection	Hikvision products at this level are equipped for use in areas where professional anti-corrosion protection is a must. Typical application scenarios include coastlines, docks, chemical plants, and more.
Moderate protection	Hikvision products at this level are equipped for use in areas with moderate anti-corrosion demands. Typical application scenarios include coastal areas about 2 kilometers (1.24 miles) away from coastlines, as well as areas affected by acid rain.
No specific protection	Hikvision products at this level are equipped for use in areas where no specific anti-corrosion protection is needed.

▪ Dimension

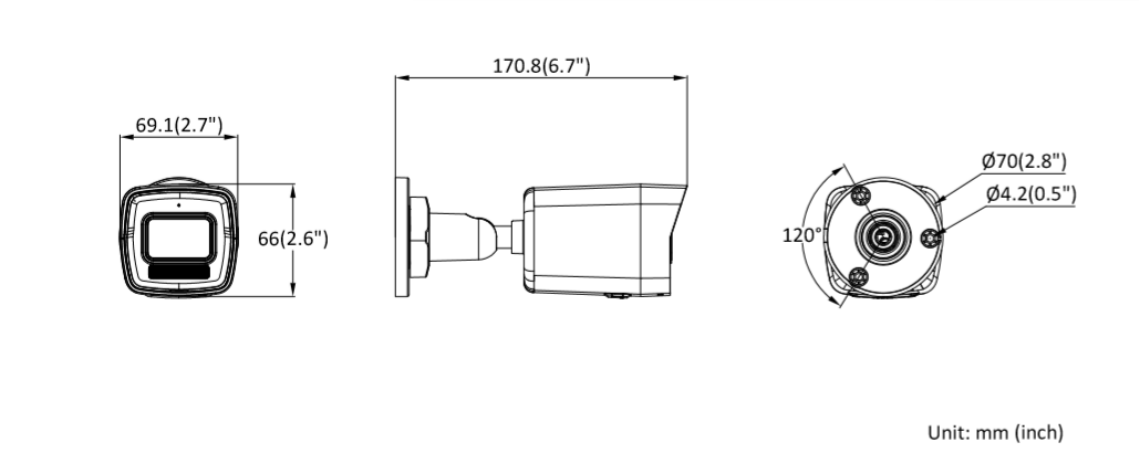

▪ Accessory

▪ Optional

DS-1275ZJ-SUS	DS-1276ZJ-SUS	DS-1280ZJ-XS

▪ Installation Methods

Vertical Pole Mounting DS-1275ZJ-SUS+DS-1280ZJ-XS	Corner Mounting DS-1276ZJ-SUS+DS-1280ZJ-XS	Junction Box DS-1280ZJ-XS
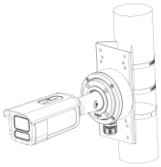	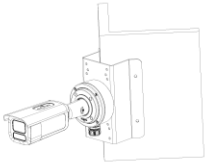	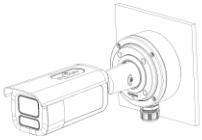

See Far, Go Further

www.hikvision.com
support@hikvision.com

© Hangzhou Hikvision Digital Technology Co., Ltd. Unless otherwise agreed, Hikvision makes no warranties, express or implied. We reserve the right to introduce modifications without notice.